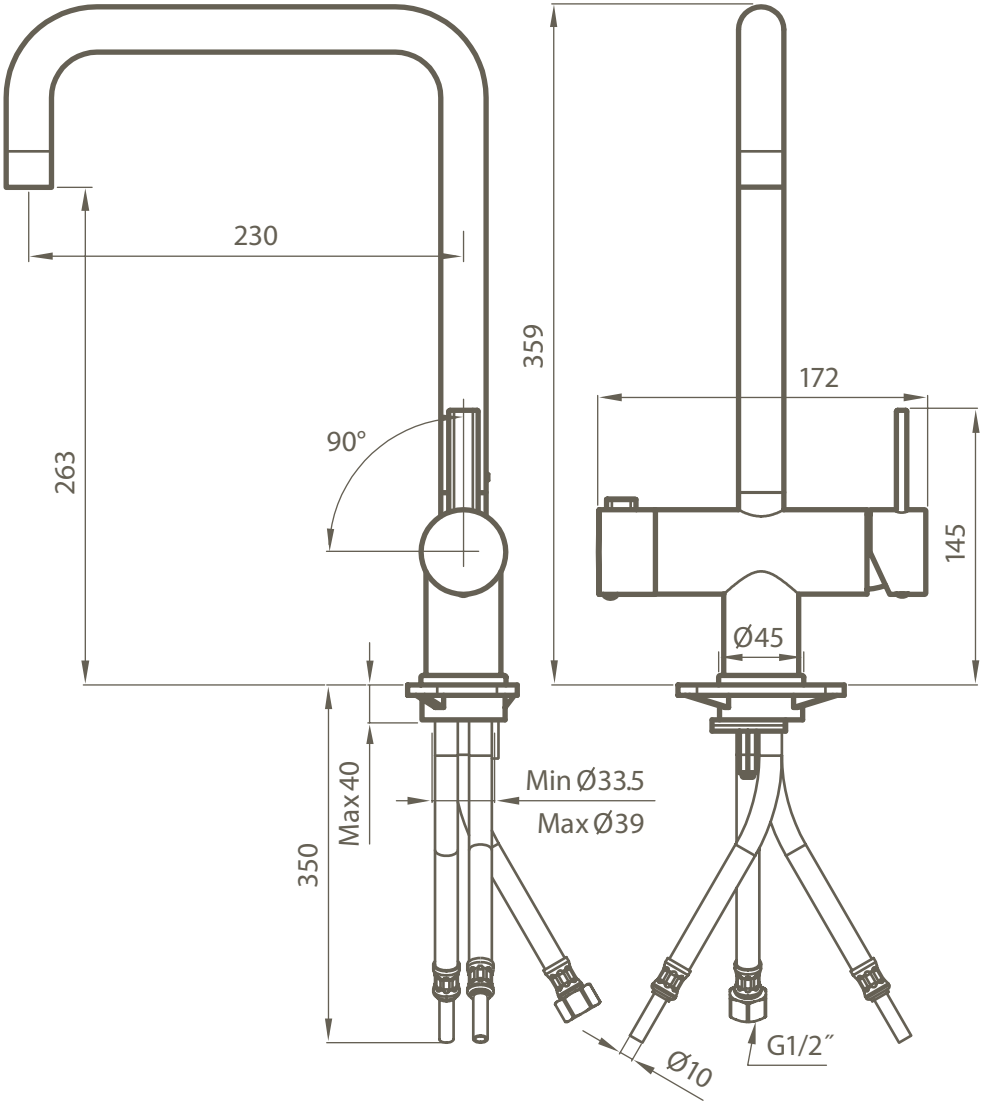
230
263
90°
359
172
145
Ø45
Max 40
350
Min Ø33.5
Max Ø39
Ø10
G1/2″