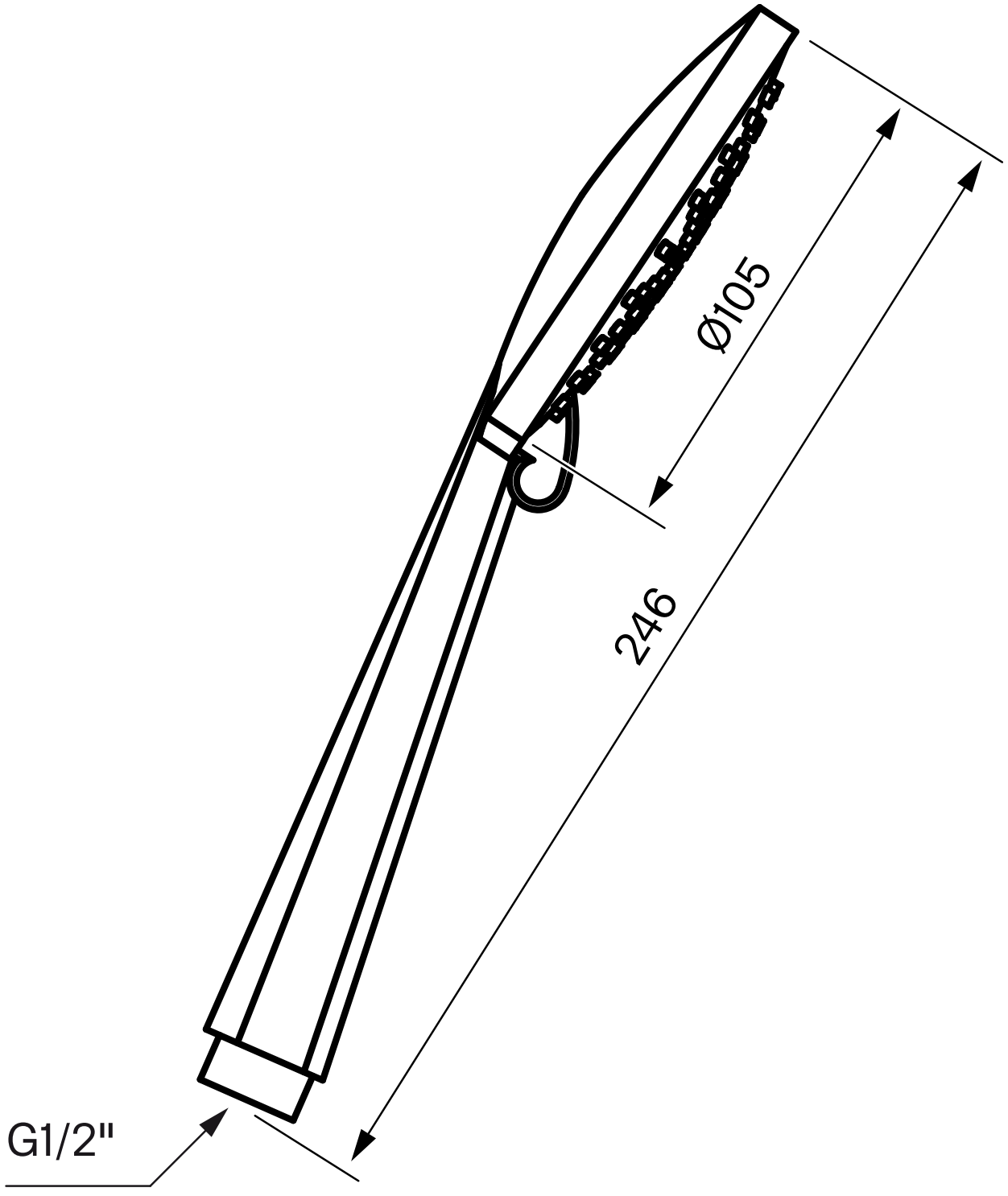
Ø105
246
G1/2"