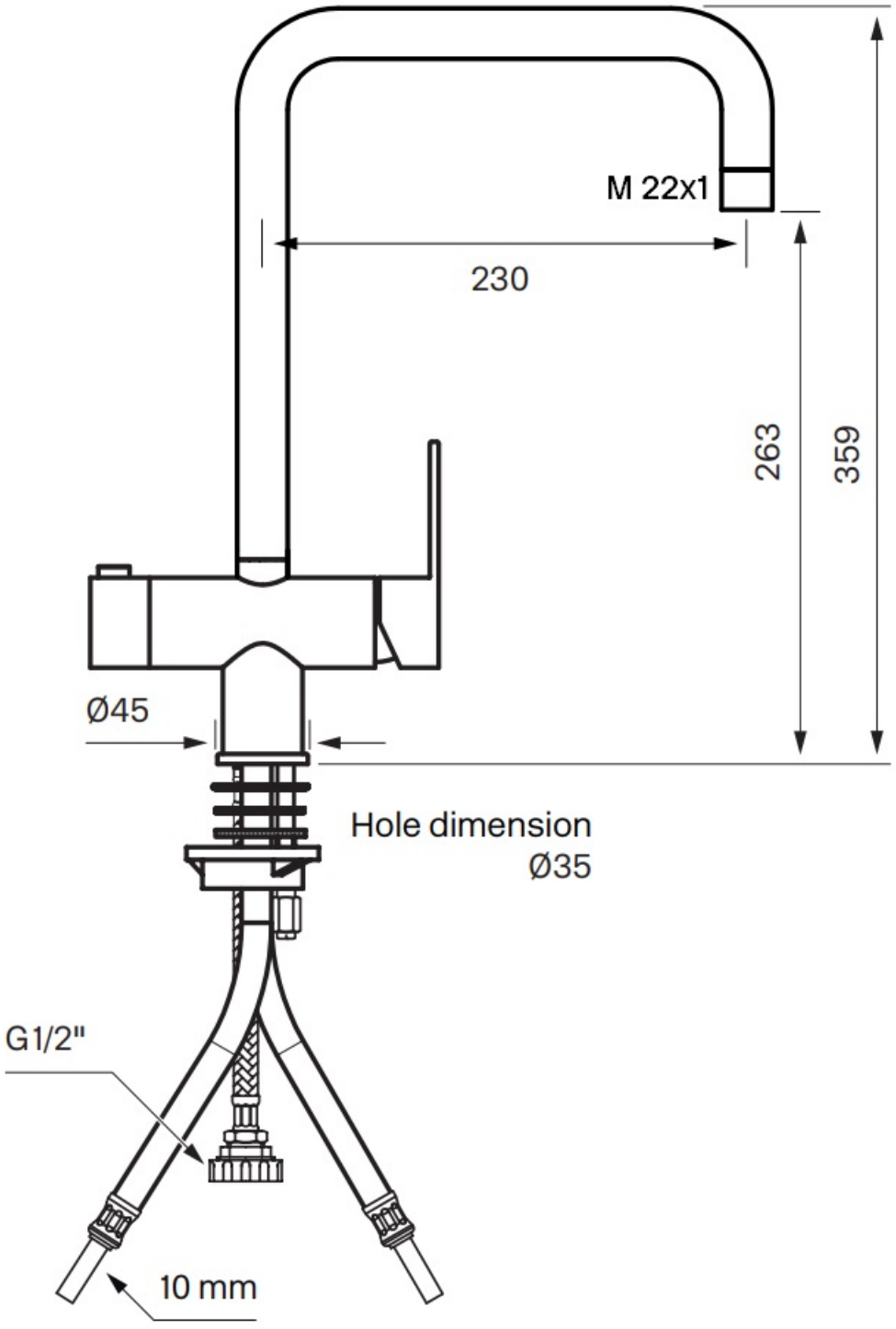
M 22x1
230
263
359
Ø45
Hole dimension
Ø35
G1/2"
10 mm